RoHS Compliant

REVISIONS			
REV.	DESCRIPTION	DATE	DESIGN

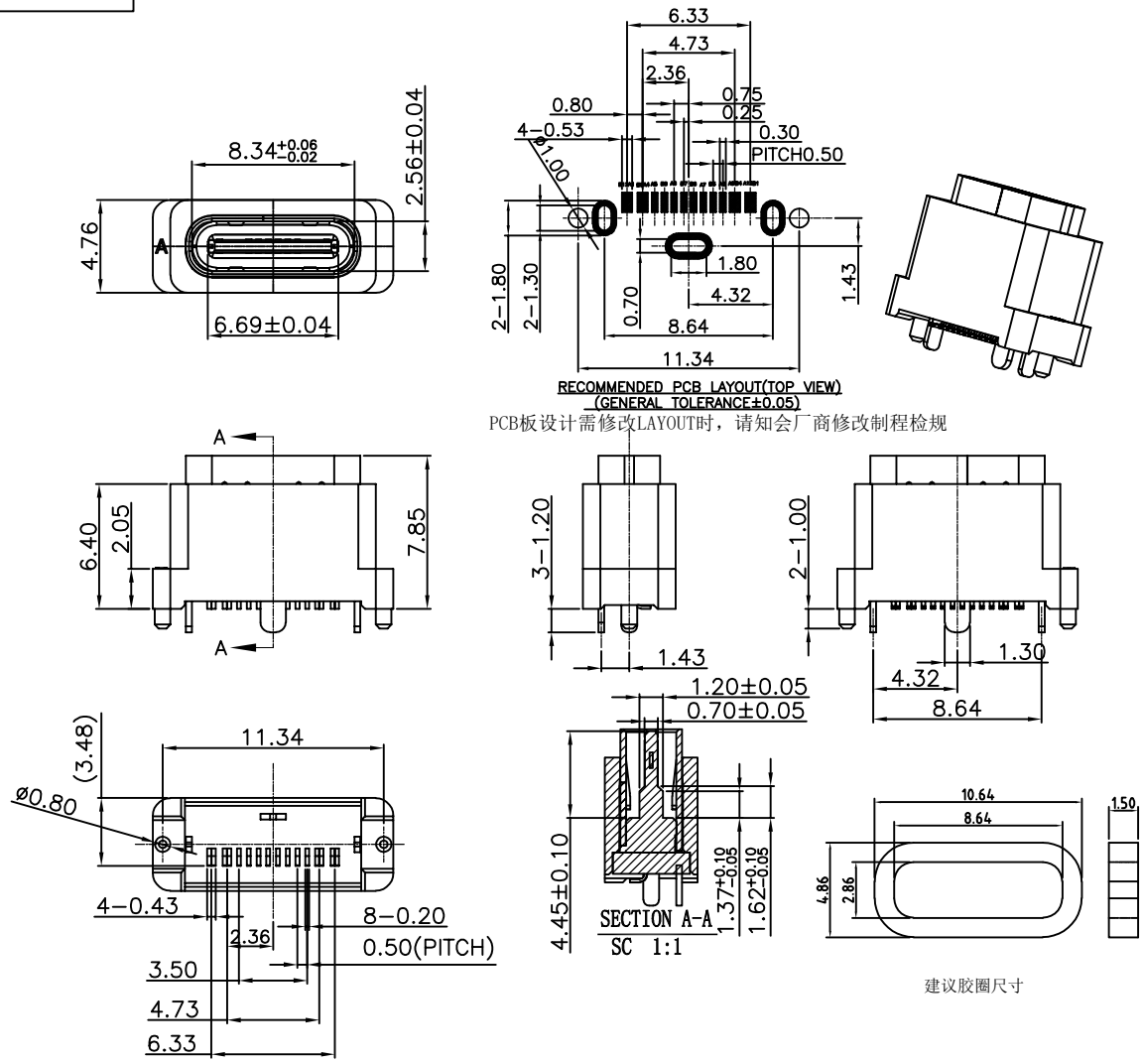

NOTES:
1. MATERIAL: SEE "TABLE 1";
2. FINISH: SEE "TABLE 1";
3. ELECTRICAL :
   3.1 CONTACT CURRENT RATING :
   3A MAX FOR VBUS PIN ;
   1.25A MAX FOR GND PIN;
   0.25A MAX FOR OTHER PIN;
   3.2 INSULATION RESISTANCE :
   100 MEGAOHMS MIN.
   3.3 DIEELECTRIC WITHSTANDING VOLTAGE :
   100V AC MAX
   3.4 CONTACT RESISTANCE :40mΩ MAX.
4.MECHANICAL CHARACTERISTICS :
   4.1. MATING FORCE: 5~20N.;
   4.2. UNMATING FORCE: 8~20N(INITIAL),6~20N(AFTER 10000 CYCLES);
   4.3. DURABILITY : 10,000 MATING CYCLES.
   4.4. OPERATING TEMPERATURE :−40°C TO +80°C
5. WATER PROOFNESS:THIS PRODUCT IS BASED ON IPX7.
6. PACKAGING: TAPE & REEL.

PART NO. INFORMATION

U06-C F X X 5 R - W180

- PORT TYPE: C: TYPE C
- GENDER: F: FEMALE; M: MALE
- CONTACT PLATED: 1: GOLD FLASH; 2: GOLD 3U"; 3: GOLD 5U"; 4: GOLD 10U"; 5: GOLD 15U"; 6: GOLD 30U"
- HOUSING MATERIAL: A: LCP; B: PBT; C: PA9T; D: PA6T; E: PA46; F: PA66; G: PA10T
- HOUSING COLOR: 2: WHITE; 5: BLACK; 9: NATURE
- PACKAGE: R: TAPE REEL

A1	GND	B12	GND
A4	VBUS	B9	VBUS
A5	CC1	B8	SBU2
A6	DP1	B7	DN2
A7	DN1	B6	DP2
A8	SBU1	B5	CC2
A9	VBUS	B4	VBUS
A12	GND	B1	GND
PIN	SIGNAL NAME	PIN	SIGNAL NAME

NO.	DESCRIPTION	MATERIAL	REMARKS	QTY
6	防水圈	硅胶	BLACK	1PCS
5	SHELL	STAINLESS STEEL	NI Plated	1PCS
4	SHIELDING PLATE	STAINLESS STEEL	NI Plated	1PCS
3	CONTACT	COPPER ALLOY	Au/NI Plated	1SET
2	SHELL HOUSING	HIGH TEMPERATURE PLASTIC	BLACK	1PCS
1	HOUSING	HIGH TEMPERATURE PLASTIC	BLACK	1PCS

Bestcreate Technology Limited

TOLERANCES UNLESS OTHERWISE SPECIFIED:

X.	±	0.30	X°	±	2°
.XX	±	0.10	.X°	±	1°
.XXX	±	0.05	.XX°	±	0.5°

Website:www.bsc-elec.com
Email:bestcreate@bsc-elec.com

DESIGN: I.L	DATE: 2018.7.7	TITLE: IPX7 16P WATERPROOF USB C FEMALE CONNECTOR VERTICAL SMT
CHECKED: C.W	DATE: 2018.7.7	MATERILA: / PART NO: U06-CFXX5R-W180 / SIZE: A4
APPROVED: C.W	DATE: 2018.7.7	FINSH: / DWG NO: U06-CFXX5R-W180 / 1 OF 1

REV:	UNIT	SCALE	QUALITY SYMBOLS
A	mm	1=1	