RoHS Compliant

REVISIONS			
REV.	DESCRIPTION	DATE	DESIGN

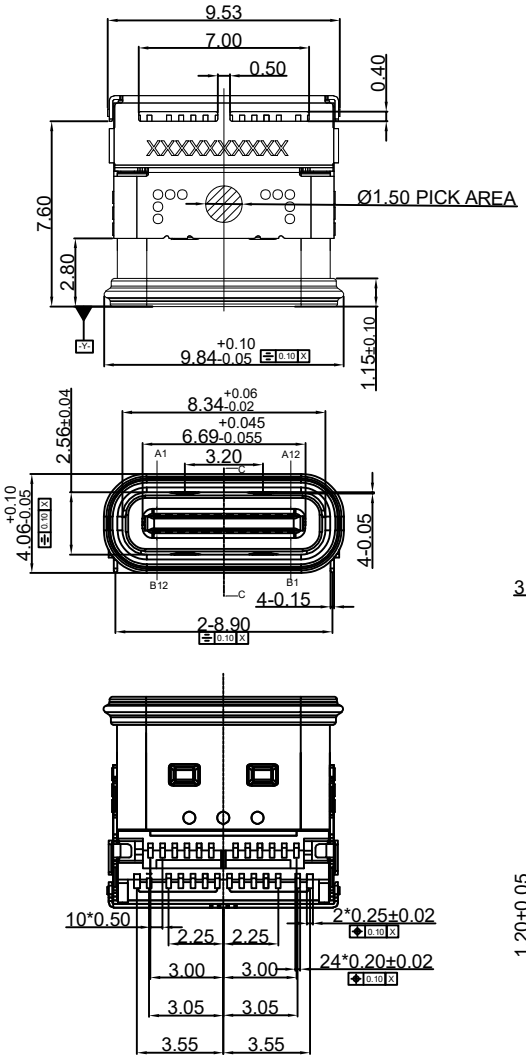

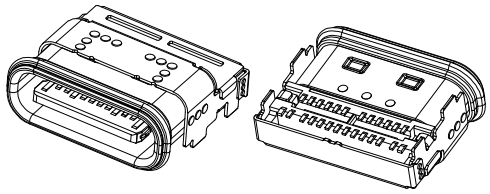

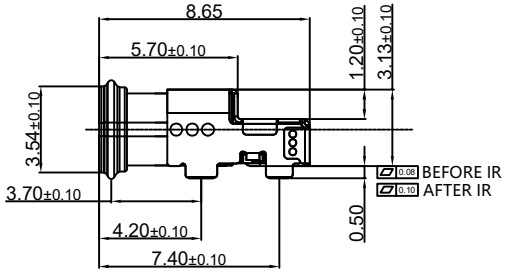

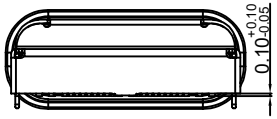

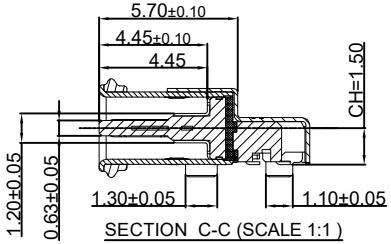

RoHS Compliant 2002/95/EC

IP-68

SPECIFICATION:

1. CURRENT RATING: 5.0 A
2. VOLTAGE RATING: 5.0 V
3. VBUS & GND PINS AND OTHER PINS: 40mΩ/PIN MAX
   SHIELD: 50mΩ/MAX
   LLCR MAX. CHANGE OF ALL PINS: 10mΩ
4. INSULATION RESISTANCE: 100MΩ MIN
5. DIELECTRIC WITHSTAND VOLTAGE,AC 100V FOR 1MINUTE
6. INSERTION FORCE: 0.5~2.0kgf
7. UNMATING FORCE: 0.8-2.0kgf
8. DURABILITY: 10000 CYCLES
9. OPERATING TEMPERATURE: -25°C~+85°C
10. THE PEAK TEMPERATURE ON THE BOARO SHALL BE MAINTAINED FOR 10 SECONDS AT 260°C

PART NO. INFORMATION

U06-C F X X 5 R - W197

- PORT TYPE: C: TYPE C
- GENDER: F: FEMALE, M: MALE
- CONTACT PLATED: 1: GOLD FLASH, 2: GOLD 3U", 3: GOLD 5U", 4: GOLD 10U", 5: GOLD 15U", 6: GOLD 30U"
- HOUSING MATERIAL: A: LCP B: PBT C: PA9T D: PA6T E: PA46 F: PA66 G: PA10T
- HOUSING COLOR: 2: WHITE, 5: BLACK, 9: NATURE
- PACKAGE: R: TAPE REEL

A1	A2	A3	A4	A5	A6	A7	A8	A9	A10	A11	A12
GND	SSTXP1	SSTXN1	VBUS	CC1	D+	D-	SBU1	VBUS	SSRXN2	SSRXP2	GND
B12	B11	B10	B9	B8	B7	B6	B5	B4	B3	B2	B1
GND	SSRXP1	SSRXN1	VBUS	SBU2	D-	D+	CC2	VBUS	SSTXN2	SSTXP2	GND

Bestcreate Technology Limited

TOLERANCES UNLESS OTHERWISE SPECIFIED:

.X	±	0.30	X.°	±	10°
.XX	±	0.20	.X°	±	8°
.XXX	±	0.10	.XX°	±	5°

Website:www.bsc-elec.com
Email:bestcreate@bsc-elec.com

DESIGN: I.L	DATE: 2018.7.7	TITLE: IP68 24P DUAL SMT WATERPROOF USB C FEMALE CONNECTOR	
CHECKED: C.W	DATE: 2018.7.7	MATERILA:	PART NO: U06-CFXX5R-W197 / SIZE: A4
APPROVED: C.W	DATE: 2018.7.7	FINSH:	DWG NO: U06-CFXX5R-W197 / 1 OF 3

REV:	UNIT	SCALE	QUALITY SYMBOLS
A	mm	1=1	

RoHS Compliant

REVISIONS			
REV.	DESCRIPTION	DATE	DESIGN

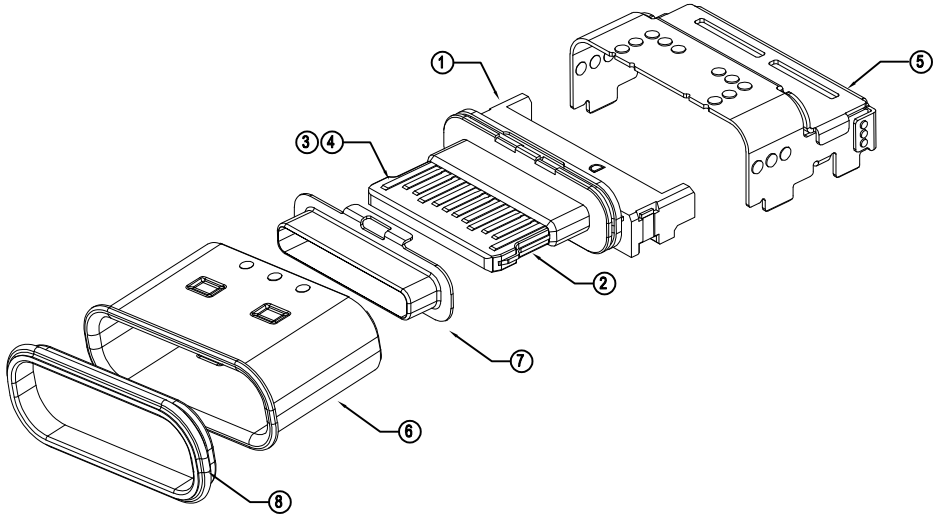

Explode View

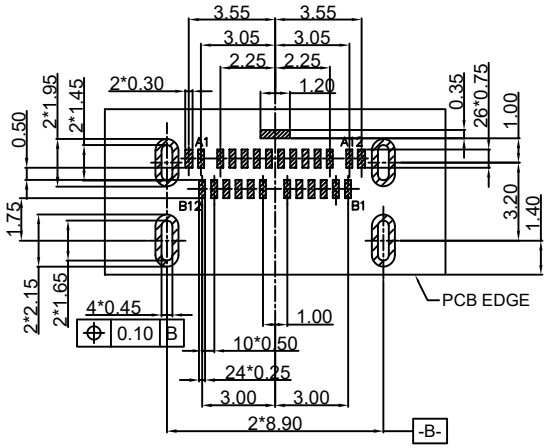

RECOMMENDED PCB LAYOUT
(Tolerance=±0.05)

NO.	PARTS	MATERIAL	REMARKS
8	LIM	CHN-LIMS	BLACK
7	SMALL SHELL	STAINLESS STEEL	NI PLATED OR CLEANING
6	MAIN SHELL	STAINLESS STEEL	NI PLATED OR CLEANING
5	OUTOR SHELL	STAINLESS STEEL	SOLDER NICKEL: 30" MIN
4	MID PLATE	STAINLESS STEEL	NICKEL: 30U" MIN
3	BOTTOM TERMINAL	COPPER ALLOY	MATING AREA : Au3u"MIN SOLDER TAIL:Au 3u", 50~150u" NICKEL OVERALL
2	TOP TERMINAL	COPPER ALLOY	MATING AREA : Au 3u"MIN SOLDER TAIL:Au 3u", 50~150u" NICKEL OVERALL
1	MOLDING HOUSING	HIGH TEMPERATURE PLASTIC	BLACK

Bestcreate Technology Limited

TOLERANCES UNLESS OTHERWISE SPECIFIED:

.X	±	0.30	X.°	±	10°
.XX	±	0.20	.X°	±	8°
.XXX	±	0.10	.XX°	±	5°

Website:www.bsc-elec.com
Email:bestcreate@bsc-elec.com

DESIGN: I.L	DATE: 2018.7.7	TITLE: IP68 24P DUAL SMT WATERPROOF USB C FEMALE CONNECTOR	
CHECKED: C.W	DATE: 2018.7.7	MATERILA:	PART NO: U06-CFXX5R-W197 / SIZE: A4
APPROVED: C.W	DATE: 2018.7.7	FINSH:	DWG NO: U06-CFXX5R-W197 / 2 OF 3

REV:	UNIT	SCALE	QUALITY SYMBOLS
A	mm	1=1	

RoHS Compliant

REVISIONS			
REV.	DESCRIPTION	DATE	DESIGN

RoHS Compliant 2002/95/EC

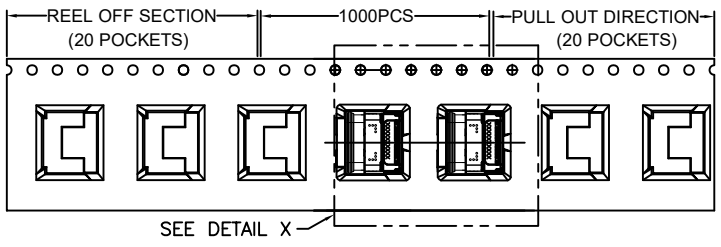

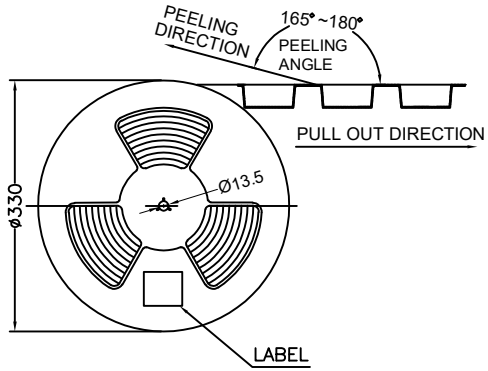

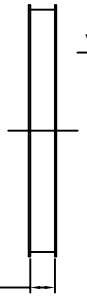

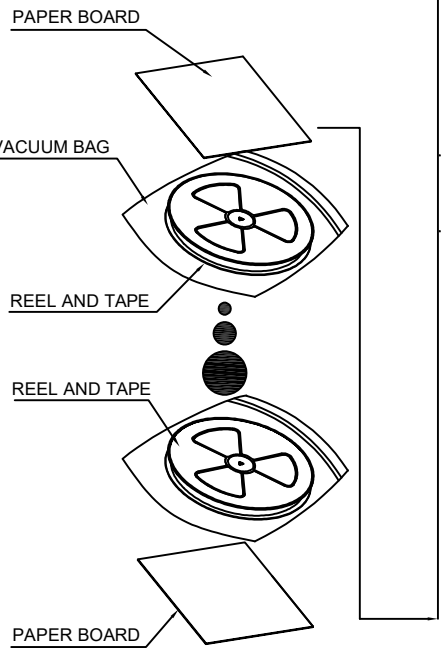

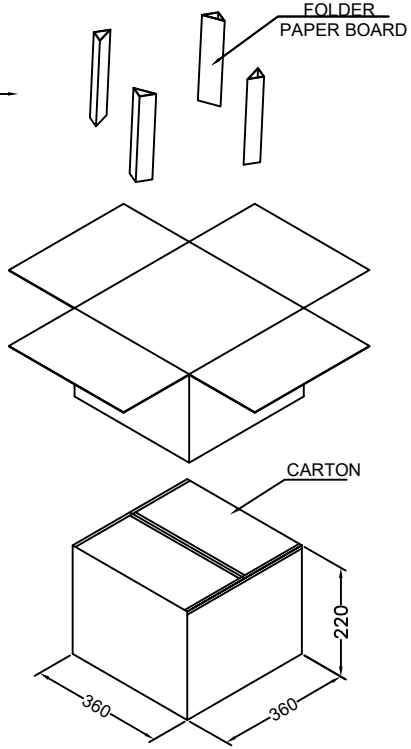

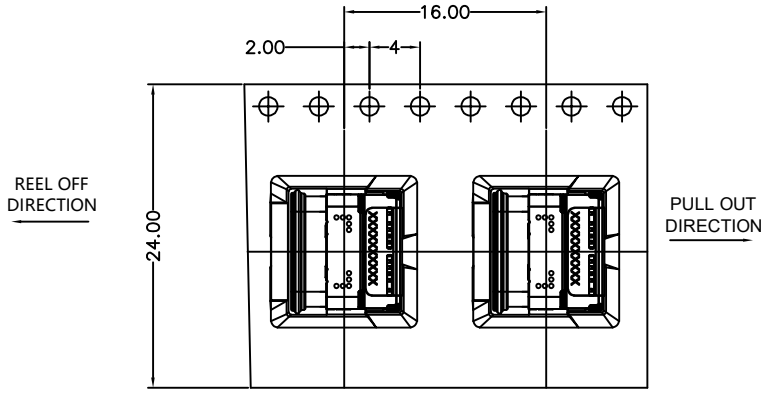

	REEL	CARTON
CONNECTOR (PCS)	1000	8000

Bestcreate Technology Limited

TOLERANCES UNLESS OTHERWISE SPECIFIED:

.X	±	0.30	X.°	±	10°
.XX	±	0.20	.X°	±	8°
.XXX	±	0.10	.XX°	±	5°

Website:www.bsc-elec.com
Email:bestcreate@bsc-elec.com

DESIGN: I.L	DATE: 2018.7.7	TITLE: IP68 24P DUAL SMT WATERPROOF USB C FEMALE CONNECTOR	
CHECKED: C.W	DATE: 2018.7.7	MATERILA:	PART NO: U06-CFXX5R-W197 / SIZE: A4
APPROVED: C.W	DATE: 2018.7.7	FINSH:	DWG NO: U06-CFXX5R-W197 / 3 OF 3

REV:	UNIT	SCALE	QUALITY SYMBOLS
A	mm	1=1	