RoHS Compliant

REVISIONS			
REV.	DESCRIPTION	DATE	DESIGN

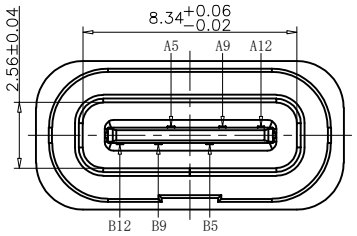

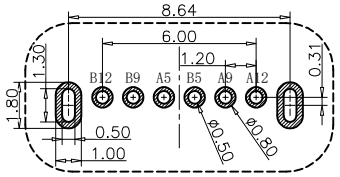

RECOMMEND P.C.B LAYOUT(COMPONENT SIDE)

TOLERANCE FOR PCB LAYOUT IS ±0.05

NOTES:

SPECIFICATION:

1. CURRENT RATING: 3.0 A
2. RATAGE VOLTAGE: 30 V
3. CONTACT CURRENT:3A VBUS,1.25A FOR GND,OTHERS 0.25A
4. VBUS & GND PINS AND OTHER PINS: 40mΩ/PIN MAX
   TEST CONDITION:20mV,under 100m
5. INSULATION RESISTANCE: 100MΩ MIN
6. DIELECTRIC WITHSTAND VOLTAGE,AC 100V FOR 1MINUTE
7. LNSERTION FORCE: 0.51~2.0kgf
8. UNMATING FORCE: 0.82-2.0kgf
9. DURABILITY:10000CYCLES
10. OPERATING TEMPERATURE: -20°C~+85°C
11. THE PEAK TEMPERATURE ON THE BOARO SHALL
    BE MAINTAINED FOR 10 SECONDS AT 210-230°C
12. WATERPROOF:IP-X7.

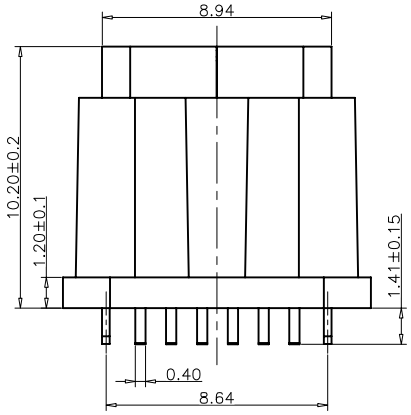

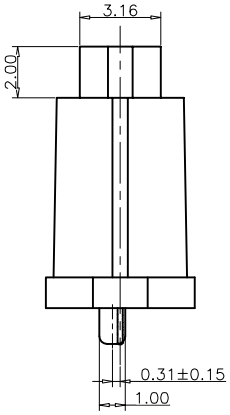

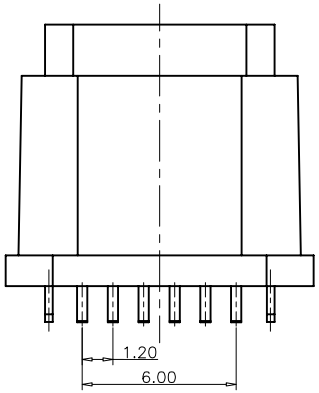

USB TYPE C PIN ASSIGNMENTS

PIN NUMBER	SIGNAL NAME	PIN NUMBER	SIGNAL NAME
		B12	GND
		B9	VBUS
A5	CC1		
		B5	CC2
A9	VBUS		
A12	GND		

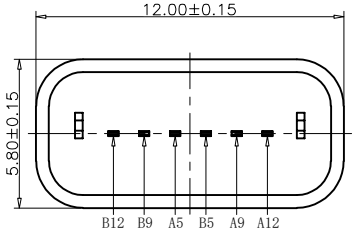

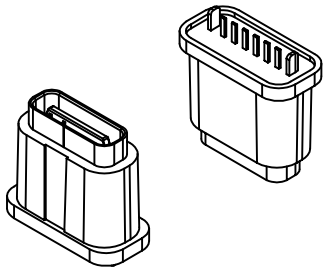

PART NO. INFORMATION

U06-C F X X 5 R - W157-V4

- PORT TYPE: C: TYPE C
- GENDER: F: FEMALE, M: MALE
- CONTACT PLATED: 1: GOLD FLASH, 2: GOLD 3U", 3: GOLD 5U", 4: GOLD 10U", 5: GOLD 15U", 6: GOLD 30U"
- HOUSING MATERIAL: A: LCP, B: PBT, C: PA9T, D: PA6T, E: PA46, F: PA66
- HOUSING COLOR: 2: WHITE, 5: BLACK, 9: NATURE
- PACKAGE: R: TAPE REEL

TABLE:

NO	PART	Q'TY	Material
1	SHELL	1	STAINLESS STEEL,NI PLATED
2	CONTACT	6	COPPER STEEL,TIN/Au/NI PLATED
3	1MD HOUSING	1	HIGH TEMPERATURE RESISTANT PLASTIC BLACK UL94 V-0
4	2MD HOUSING	1	HIGH TEMPERATURE RESISTANT PLASTIC BLACK UL94 V-0

Bestcreate Technology Limited

TOLERANCES UNLESS OTHERWISE SPECIFIED:

X.	±	0.20	X.°	±	5°
.XX	±	0.15	.X°	±	2°
.XXX	±	0.10	.XX°	±	1°

Website:www.bsc-elec.com

Email:bestcreate@bsc-elec.com

DESIGN: I.L	DATE: 2018.7.7	TITLE: IPX7 USB TYPE C 6P VERTICAL DIP TYPE,H=10.2
CHECKED: C.W	DATE: 2018.7.7	MATERILA: / PART NO: U06-CFXX5R-W157-V5 / SIZE: A4
APPROVED: C.W	DATE: 2018.7.7	FINSH: / DWG NO: U06-CFXX5R-W157-V5 / 1 OF 3

REV:	UNIT	SCALE	QUALITY SYMBOLS
A	mm	1=1	

RoHS Compliant

REVISIONS			
REV.	DESCRIPTION	DATE	DESIGN

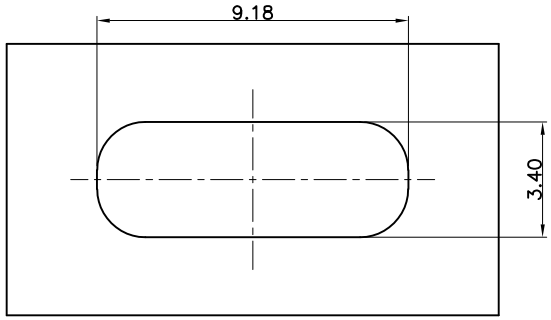

密封开孔参考尺寸(只供参考)
组装外壳时需要打环保润滑油

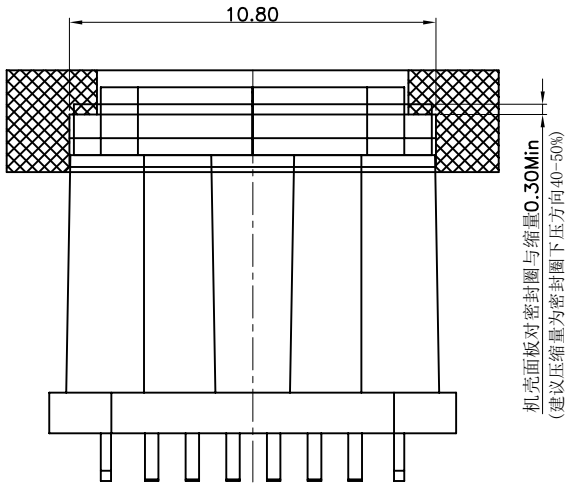

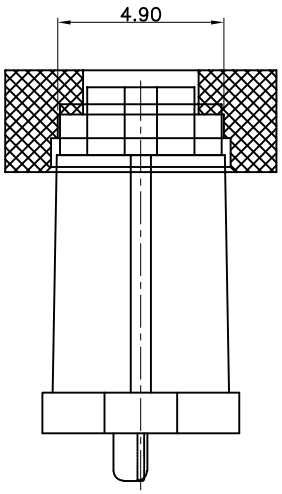

Bestcreate Technology Limited

TOLERANCES UNLESS OTHERWISE SPECIFIED:

X.	±	0.20	X°	±	5°
.XX	±	0.15	.X°	±	2°
.XXX	±	0.10	.XX°	±	1°

Website:www.bsc-elec.com
Email:bestcreate@bsc-elec.com

DESIGN: I.L	DATE: 2018.7.7	TITLE: IPX7 USB TYPE C 6P VERTICAL DIP TYPE,H=10.2	
CHECKED: C.W	DATE: 2018.7.7	MATERILA:	PART NO: U06-CFXX5R-W157-V5 / SIZE: A4
APPROVED: C.W	DATE: 2018.7.7	FINSH:	DWG NO: U06-CFXX5R-W157-V5 / 2 OF 3

REV:	UNIT	SCALE	QUALITY SYMBOLS
A	mm	1=1	

RoHS Compliant

REVISIONS			
REV.	DESCRIPTION	DATE	DESIGN

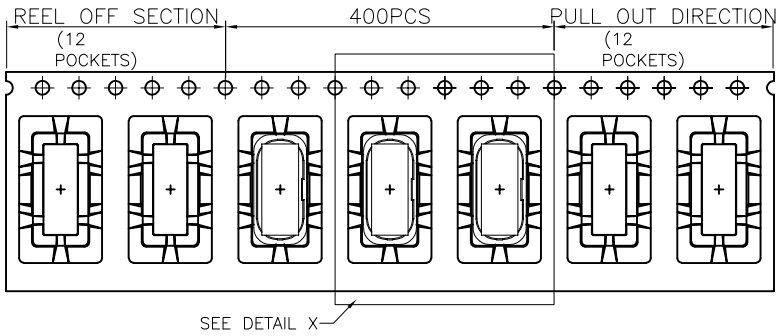

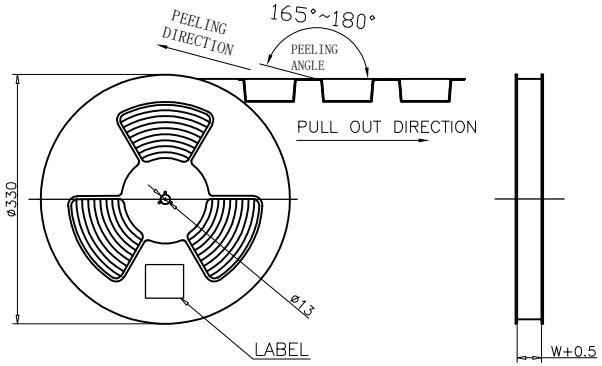

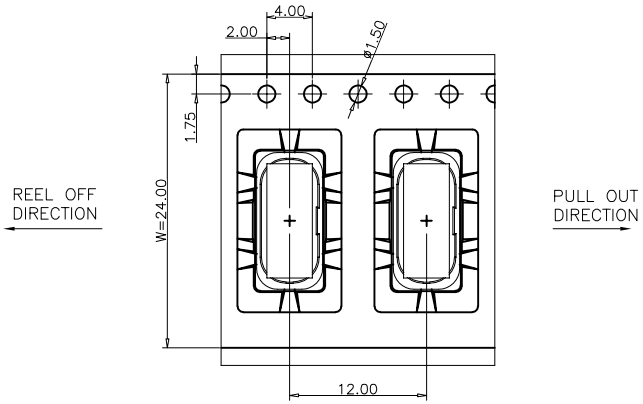

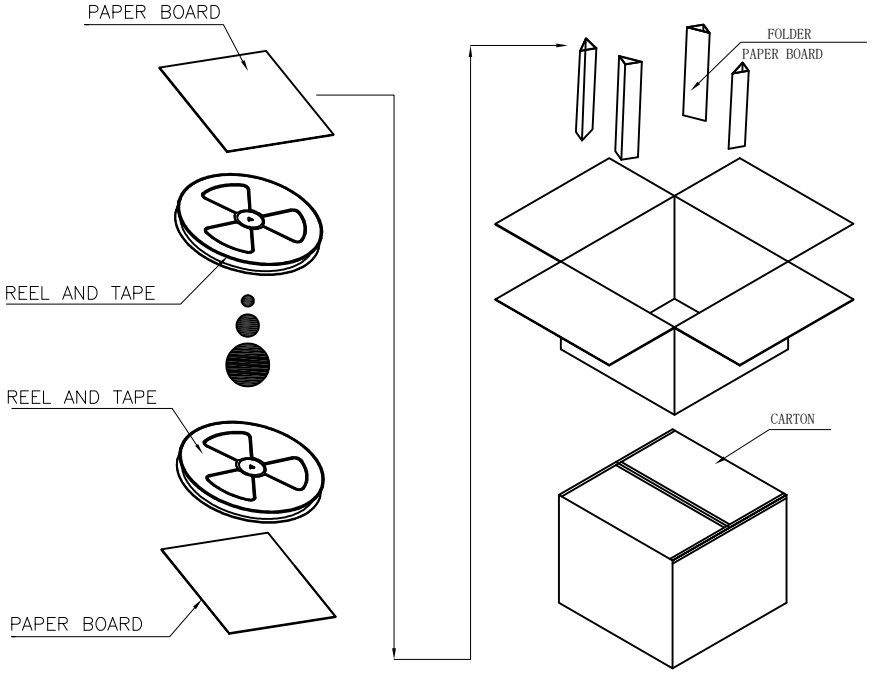

	REEL	CARTON
CONNECTOR (PCS)	400	4000

Bestcreate Technology Limited

TOLERANCES UNLESS OTHERWISE SPECIFIED:					
X.	±	0.20	X.°	±	5°
.XX	±	0.15	.X°	±	2°
.XXX	±	0.10	.XX°	±	1°

Website:www.bsc-elec.com
Email:bestcreate@bsc-elec.com

DESIGN:	DATE:
I.L	2018.7.7
CHECKED: C.W	DATE: 2018.7.7
APPROVED: C.W	DATE: 2018.7.7

TITLE: IPX7 USB TYPE C 6P VERTICAL DIP TYPE,H=10.2

MATERILA:	PART NO: U06-CFXX5R-W157-V5	SIZE: A4
FINSH:	DWG NO: U06-CFXX5R-W157-V5	3 OF 3

REV:	UNIT	SCALE	QUALITY SYMBOLS
A	mm	1=1	