RoHS Compliant

REVISIONS			
REV.	DESCRIPTION	DATE	DESIGN

IP-X6

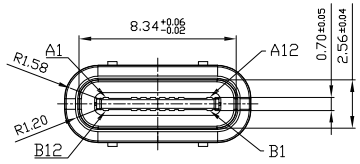

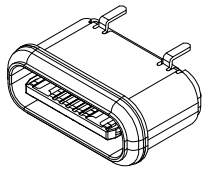

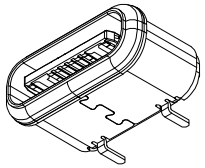

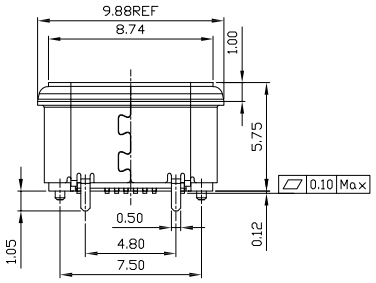

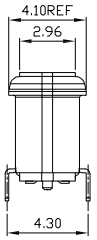

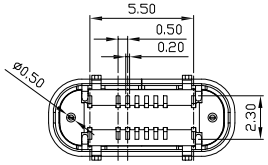

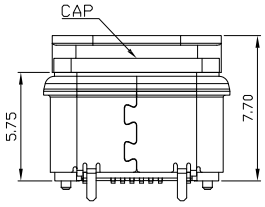

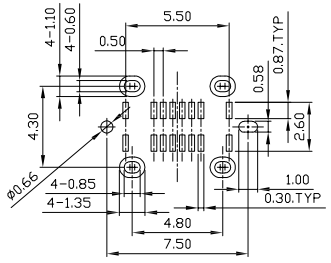

PCB LAYOUT ±0.05

NOTE:
1. Material:
   All Housing: THERMAL PLASTIC, PA46 Black,UL94V-0
   Insulation Jacket: THERMAL PLASTIC,Black,UL94V-0
   Contact: Copper Alloy
   Mid Plate: Stainless Steel
   Shell: Stainless Steel
   O-Ring: Acrylate
2. FINISH:
   Contact: Ni 50u" MIN. UNDERPLATED OVER ALL
   Au PLATED ON THE FUNCTIONAL AREA OF CONTACT.
   (GOLD PLATING THICKNESS FOLLOW THE P/N)
   PLATING SPECIFICATIONS OF THE SOLDER AREA FOLLOW THE P/N
   Mid-Plate: CLEAR ONLY
   Shell: 30u" MIN Nickel Over All
3. Electrical Characteristics:
   Current Rating: 5A For Pin(A4,A9,B4,B9)
   1.25A For Pin(B5)
   0.25A For Others Pin
   Insulation Resistance: 100MΩ Min.
   Contact Resistance: 50 mΩ Max.
   Dielectric Withstanding Voltage: 100V/AC 1Minute
4. Mechanical Characteristics:
   Insertion Force: 5~20N
   Extraction Force: Initial: 8~20N
   After durability: 6~20N
   Durability :10000 Cycles
5. Operating Temperature: -30°C TO +85°C

PIN ASSIGNMENT

PIN NUMBER	SIGNAL NAME	PIN NUMBER	SIGNAL NAME
A1	GND	B12	GND
A2	TX1+	B11	RX1+
A3	TX1-	B10	RX1-
A4	VBUS	B9	VBUS
A5	CC1	B8	SBU2
A6	D+	B7	D-
A7	D-	B6	D+
A8	SBU1	B5	CC2
A9	VBUS	B4	VBUS
A10	RX2-	B3	TX2-
A11	RX2+	B2	TX2+
A12	GND	B1	GND

PART NO. INFORMATION

U06-C F X X 5 R - W196 - V1

- PORT TYPE: C: TYPE C
- GENDER: F: FEMALE, M: MALE
- CONTACT PLATED: 1: GOLD FLASH, 2: GOLD 3U", 3: GOLD 5U", 4: GOLD 10U", 5: GOLD 15U", 6: GOLD 30U"
- HOUSING MATERIAL: A: LCP B: PBT C: PA9T D: PA6T E: PA46 F: PA66 G: PA10T
- HOUSING COLOR: 2: WHITE, 5: BLACK, 9: NATURE
- PACKAGE: R: TAPE REEL

Bestcreate Technology Limited

TOLERANCES UNLESS OTHERWISE SPECIFIED:					
.X	±	0.25	X°	±	4°
.XX	±	0.15	.X°	±	3°
.XXX	±	0.10	.XX°	±	2°

Website:www.bsc-elec.com
Email:bestcreate@bsc-elec.com

DESIGN:	DATE:
I.L	2018.7.7
CHECKED:	DATE:
C.W	2018.7.7
APPROVED:	DATE:
C.W	2018.7.7

TITLE: VERTICAL SMT IPX6 16P WATERPROOF USB C FEMALE CONNECTOR,H=5.75

REV:	UNIT	SCALE	QUALITY SYMBOLS
A	mm	1=1	

MATERILA:	PART NO:	SIZE:
	U06-CFXX5R-W196-V1	A4
FINSH:	DWG NO: U06-CFXX5R-W196-V1	1 OF 2

RoHS Compliant

REVISIONS			
REV.	DESCRIPTION	DATE	DESIGN

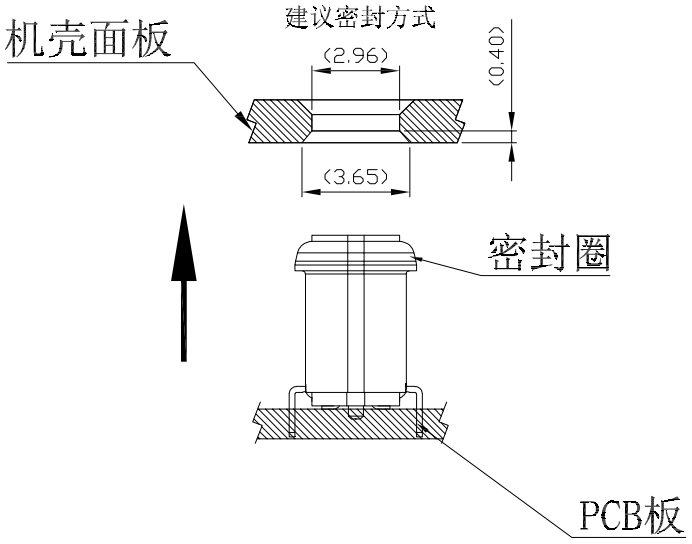

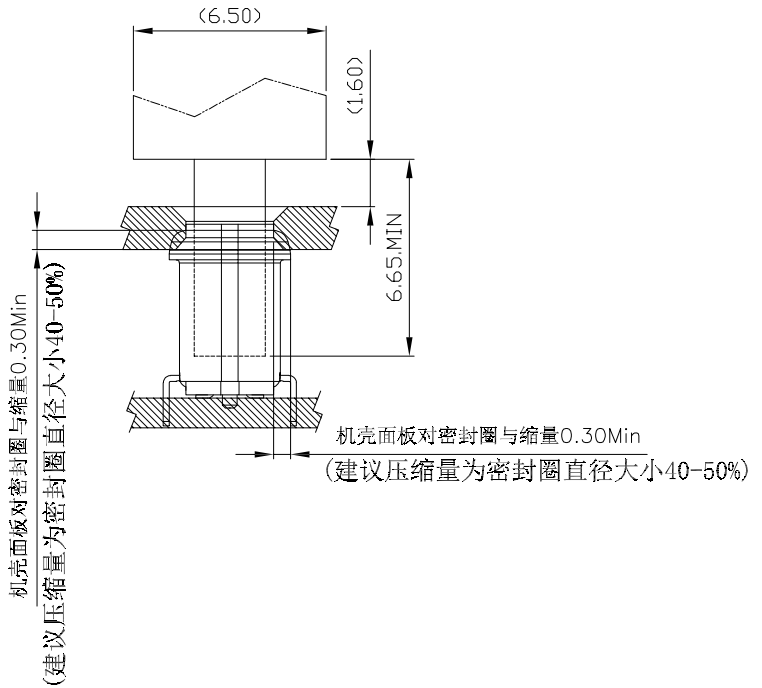

Bestcreate Technology Limited

TOLERANCES UNLESS OTHERWISE SPECIFIED:					
.X	±	0.25	X°	±	4°
.XX	±	0.15	.X°	±	3°
.XXX	±	0.10	.XX°	±	2°

Website:www.bsc-elec.com
Email:bestcreate@bsc-elec.com

DESIGN:	DATE:
I.L	2018.7.7
CHECKED:	DATE:
C.W	2018.7.7
APPROVED:	DATE:
C.W	2018.7.7

TITLE: VERTICAL SMT IPX6 16P WATERPROOF USB C FEMALE CONNECTOR,H=5.75

REV:	UNIT	SCALE	QUALITY SYMBOLS
A	mm	1=1	

MATERILA:	PART NO:	SIZE:
	U06-CFXX5R-W196-V1	A4
FINSH:	DWG NO:	2 OF 2
	U06-CFXX5R-W196-V1	