RoHS Compliant

REVISIONS			
REV.	DESCRIPTION	DATE	DESIGN

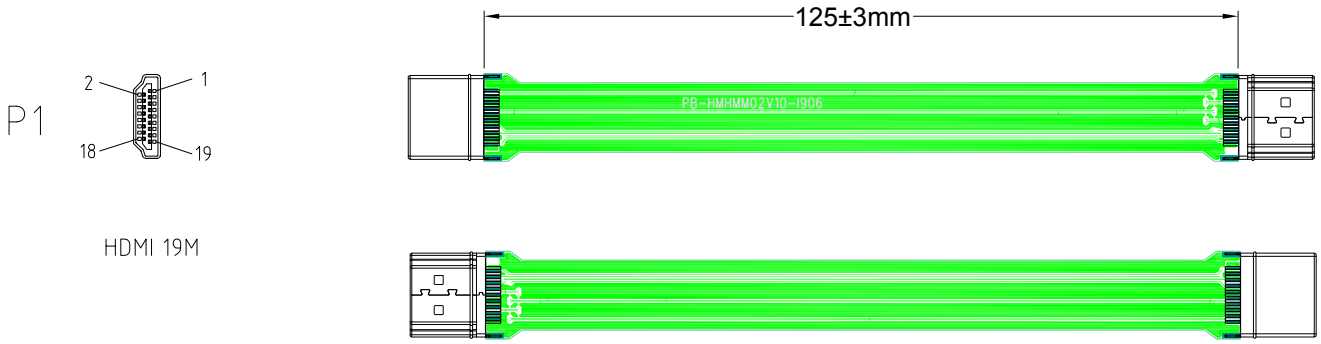

PIN ASSIGNMENT

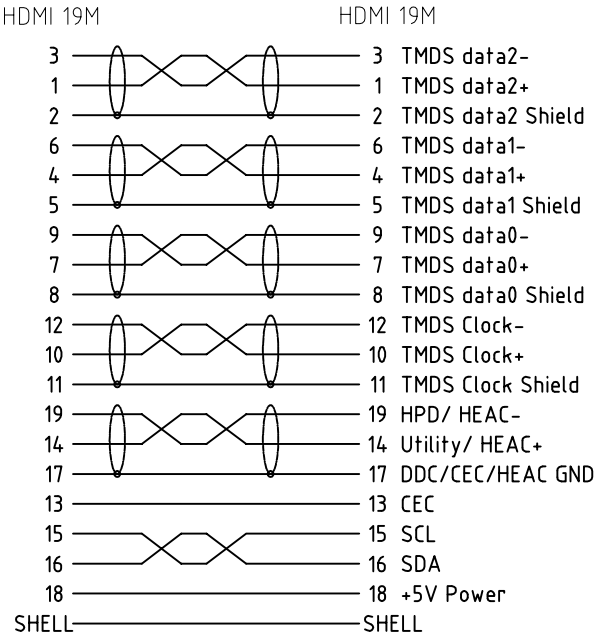

NOTE:

1.CABLE: HDMI 4K 60HZ FPC FLAT CABLE 11.5×0.2MM

2.CONNECTOR:P1&P2 :HDMI 19P MALE CONTACT:G/F; SHELL:NICKEL-PLATED WITH METAL HOOD .

3.ELECTRICAL TEST:

(1)100% OPEN SHORT & MIS WIRE TEST.

(2)CONTACT RESISTANCE 5 ohm Max .

(3)INSULATION RESISTANCE 2M ohm Min .

(4)HI-POT DC300V

4.PACKING: EACH PC / POLYBAG

Bestcreate Technology Limited

TOLERANCES UNLESS OTHERWISE SPECIFIED:					
.X	±	0.30	X°	±	3°
.XX	±	0.20	.X°	±	2°
.XXX	±	0.10	.XX°	±	1°

Website:www.bsc-elec.com

Email:bestcreate@bsc-elec.com

DESIGN:	DATE:
I. L	2026. 11. 3
CHECKED:	DATE:
C. W	2026. 11. 3
APPROVED:	DATE:
C. W	2026. 11. 3

TITLE: HDMI A TO A FLAT CABLE

REV:	UNIT	SCALE	QUALITY SYMBOLS
A	mm	1=1	

MATERILA:	PART NO:	SIZE:
	HF1900-125ATA	A4
FINSH:	DWG NO:	
	HF1900-125ATA	